SC12

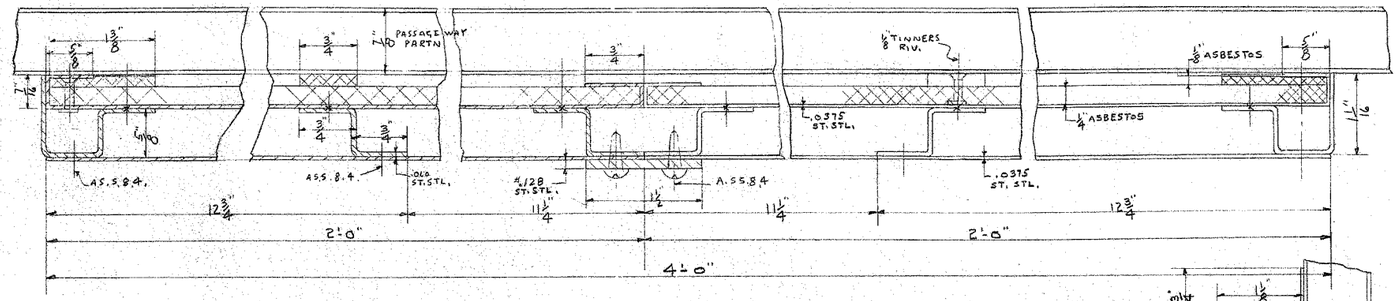

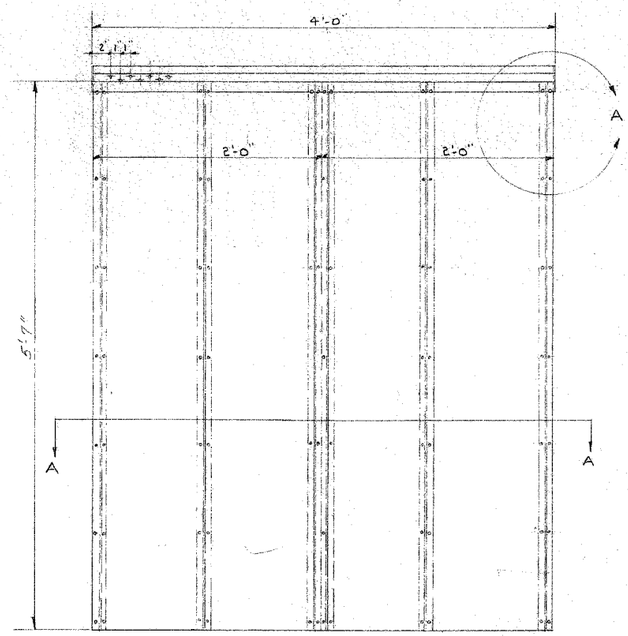

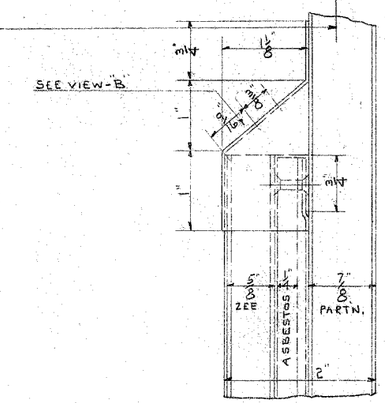

VIEW - A

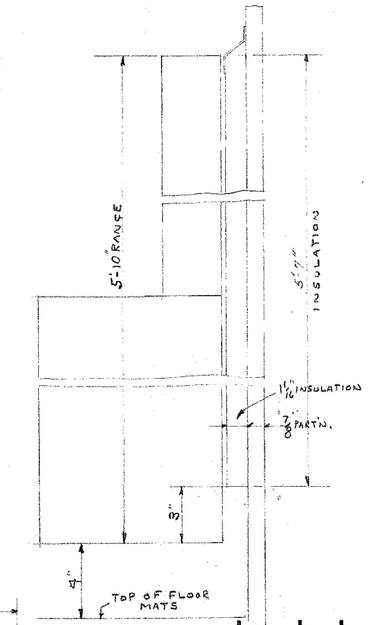

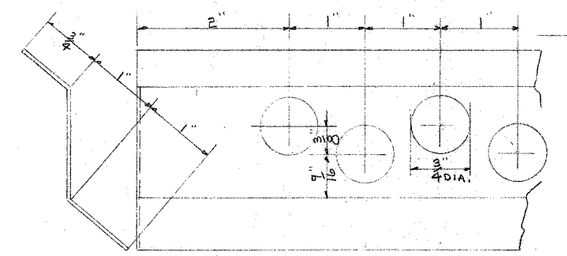

VIEW - B.

SHOP MARK	No. PER CAR	LOT
	1	PC 3124
	1	PC 3125

A

AMERICAN CAR AND FOUNDRY CO.

3675402

INSULATION ON KITCHEN PASS. WAY PARTN. AT RANGE & BROILER

2-22-49

a.c.f.

1/19/53 A - CHANGED THICKNESS OF BATTEN AT JOINT TO .128
J.P.H.

"PHOENIX" NO. 788 K & E CO., N.Y.