DRAWING NUMBER	REVISION
09053-Q005	

ASSEMBLY LIST

ITEM	QTY./ASSY.	DESCRIPTION	REF. DRAWING	PART NO.
1	1	COUPLER OPERATING ROD CONNECTOR H17	-	-
2	1	COUPLER OPERATING ROD - LOCKLIFT END, LEFT SIDE	09053-C002	C002-01
ASSY	QTY./CAR	DESCRIPTION	NEXT ASSY./APPL.	
A	1	COUPLER OPERATING ROD ASSEMBLY - LOCKLIFT END, LEFT SIDE	09053-A005	Q005-A

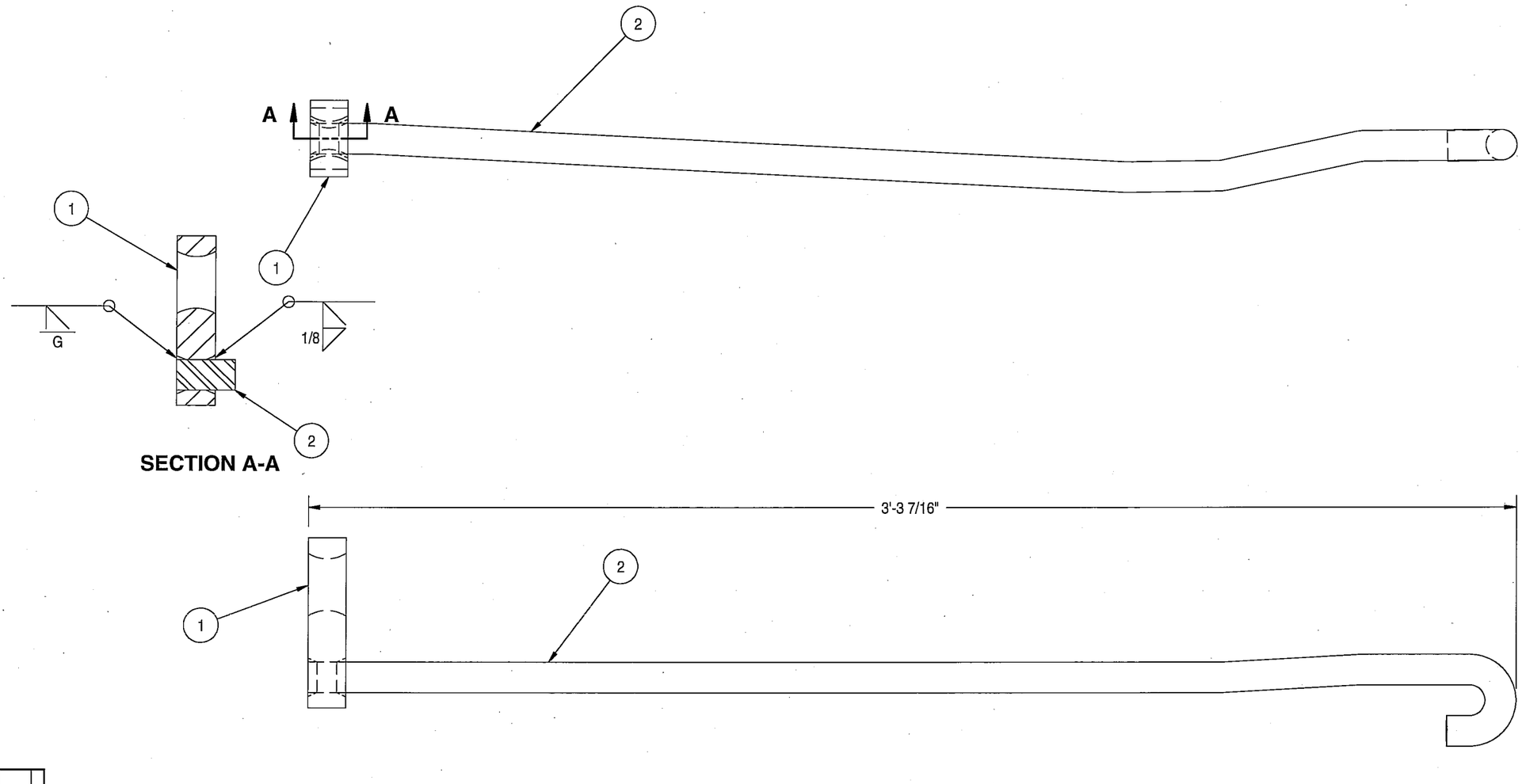

CAD FILENAME	DRAWING SIZE
09053Q005.dwg	B

THIS DRAWING CURRENT AS OF: 01Mar10 - 9:30am

REV	DATE	DESCRIPTION	REV BY	CHKD BY

THIS DRAWING IS ISSUED WITH THE EXPRESS AGREEMENT THAT THIS DRAWING AND INFORMATION THEREIN CONTAINED ARE THE JOINT PROPERTY OF STARFIRE ENGINEERING AND TECHNOLOGIES, INC. AND THE CUSTOMER SO NAMED IN THE TITLEBLOCK, IF ANY, AND WILL NOT BE REPRODUCED, COPIED, OR OTHERWISE DISPOSED OF, DIRECTLY OR INDIRECTLY, AND WILL NOT BE USED IN WHOLE OR IN PART TO ASSIST IN MAKING OR TO FURNISH ANY INFORMATION FOR THE MAKING OF DRAWINGS, PRINT OR OTHER REPRODUCTION HEREOF, OR FOR THE MAKING OF APPARATUS OR PARTS THEREOF EXCEPT UPON WRITTEN PERMISSION FROM STARFIRE ENGINEERING AND TECHNOLOGIES, INC. OR THE CUSTOMER SO NAMED IN THE TITLEBLOCK, IF ANY, FIRST OBTAINED AND SPECIFIC AS TO EACH CASE. THE ACCEPTANCE AND POSSESSION OF THIS DRAWING WILL BE CONSTRUED AS AN ACCEPTANCE OF THE FOREGOING AGREEMENT.

THIS DRAWING IS NOT VALID UNLESS IT CONTAINS THE APPROVING INITIALS OF A STARFIRE ENGINEERING AND TECHNOLOGIES, INC. EMPLOYEE. MARKUPS, REDLINES, AND OTHER MANUAL DRAWING MODIFICATIONS ARE NOT APPROVED BY STARFIRE ENGINEERING AND TECHNOLOGIES, INC. THIS DRAWING IS FURTHER NOT VALID UNLESS USED IN CONJUNCTION WITH ALL PART, ASSEMBLY AND/OR APPLICATION DRAWINGS REFERENCED BY THIS DRAWING.

TOLERANCES DO NOT ACCUMULATE AND UNLESS OTHERWISE NOTED:
LINEAR ± 1/16", ANGULAR ± .25°

SYMBOL LEGEND: ASSEMBLY, ITEM, REVISION, NOTE

DRAWN	GRAPHIC CK	PROJECT
eaburris	TJT	P09E-053
ENGINEER CK	APPROVED	DATE
SR	ACB	2/12/2010

COUPLER OPERATING ROD ASSEMBLY - LOCKLIFT END, LEFT SIDE

CUSTOMER: ERIX RAILCAR, ERIC HOPP

GREAT NORTHERN 1146 RESTORATION
STRUCTURAL ENGINEERING SUPPORT

STARFIRE
STARFIRE ENGINEERING AND TECHNOLOGIES, INC.
2429 IOWA STREET, SUITE K
LAWRENCE, KANSAS 66046-4040
785-842-1111 785-842-8811 FAX

SCALE	SHEET	DRAWING NUMBER	REVISION
NO SCALE	1 OF 1	09053-Q005	

SET CATEGORY NUMBER: DG